HTL7G06S006P

6W, 1.8 - 600 MHz LDMOS Amplifier

Product datasheet

Description

The HTL7G06S006P is an unmatched discrete LDMOS Power Amplifier with 6W saturated output power covering frequency range for VHF/UHF applications.

Features

- Operating Frequency Range: VHF/UHF
- Operating Drain Voltage: +7.2V
- Saturation Output Power: 6W
- Enhanced robustness design without device degradation
- Internally integrated enhanced ESD design, using an internal monolithic Zener diode from Gate to Source

Freq (MHz)	Vdd (V)	Pin (W)	Pout (W)	Eff (%)
175	7.4	0.32	6.5	66
520	7.4	0.32	5.5	61

Test conditions unless otherwise noted: 25 °C, V_{DD} = +7.4Vdc, I_{DQ}= 500mA, CW Signal

Applications

- VHF Band handheld Walkie-talkie
- UHF Band handheld Walkie-talkie
- 1.8-600MHz other application Drivers or Final stage Amplifiers

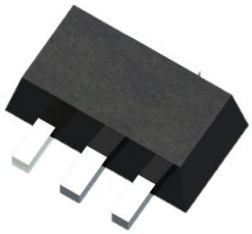

SOT-89-3L
HTL7G06S006P

RoHS compliant

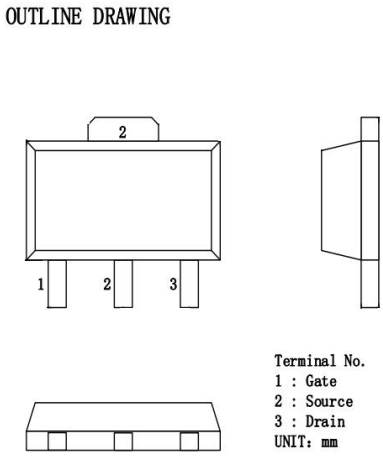

Note: Exposed backside of the package is the source terminal for the transistor

Pin Connections

Ordering Information

Part Number	Description
HTL7G06S006P	Reel Package
HTL7G06S006P EVB	175 MHz EVB
HTL7G06S006P EVB1	520 MHz EVB

Absolute Maximum Ratings

Parameter	Range/Value	Unit
Drain voltage (V_{DSS})	-0.5 to +20	V
Gate voltage (V_{GS})	-5 to +10	V
Operation voltage (V_{DD})	+9.0	V
Storage Temperature (T_{STG})	-55 to +150	°C
Junction Temperature (T_J)	-40 to +150	°C
Thermal Resistance Junction to Case (R_{TH})	6.5	°C /W

Electrical Specification

DC Characteristics

Parameter	Conditions	Min	Typ	Max	Unit
Breakdown Voltage $V_{(BR)DSS}$	Vgs=0V, Ids=39.6uA	20	-	-	V
Gate-Source Threshold Voltage $V_{GS(th)}$	Vds=Vgs, Ids=39.6uA	0.8	1.55	2.6	V
Drain Leakage Current I_{DSS}	Vgs=0V, Vds=17V	-	-	1	uA
Gate Leakage Current I_{GSS}	Vgs=10V, Vds=0V	-	-	1	uA

Load Mismatch Test

Condition	Test Result
VSWR=10:1, at all Phase Angles, V_{DD} = +8.4Vdc, I_{DQ}= 500mA, CW signal 37 dBm @175MHz test on WATECH Application Board	No Device Degradation
VSWR=10:1, at all Phase Angles, V_{DD} = +8.4Vdc, I_{DQ}= 500mA, CW signal 37 dBm @520MHz test on WATECH Application Board	No Device Degradation

RF Characteristics (CW)

Freq (MHz)	Vdd (V)@Idq (mA)	Pin (W)	Pout (W)	Eff (%)
430	7.4@500	0.31	6.5	66

Test conditions unless otherwise noted: 25 °C test on WATECH Application Board

Freq (MHz)	Vdd (V)@Idq (mA)	Pin (W)	Pout (W)	Eff (%)
520	7.4@500	0.31	5.5	61

Test conditions unless otherwise noted: 25 °C test on WATECH Application Board

DC Performance

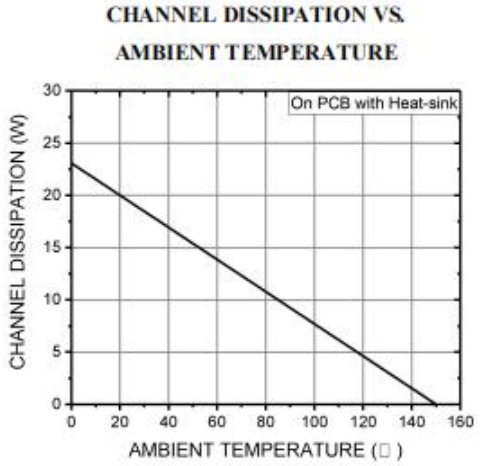

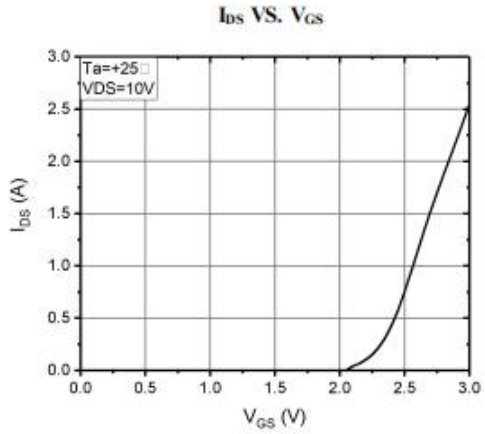

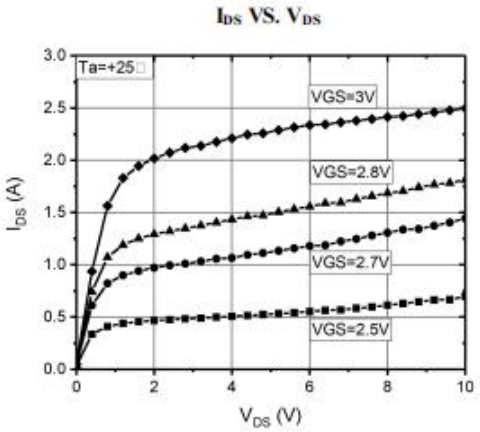

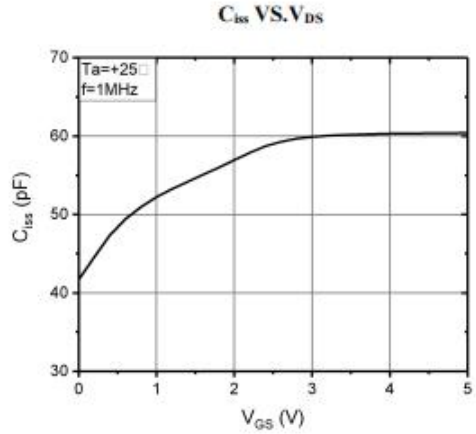

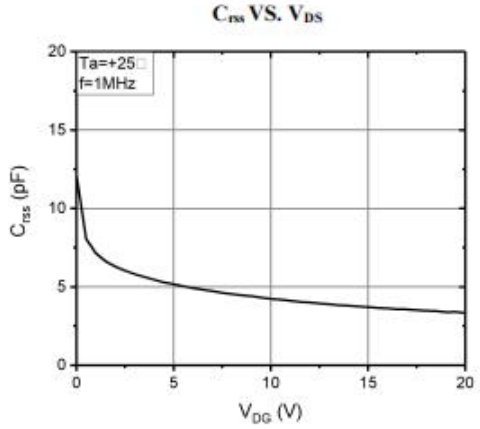

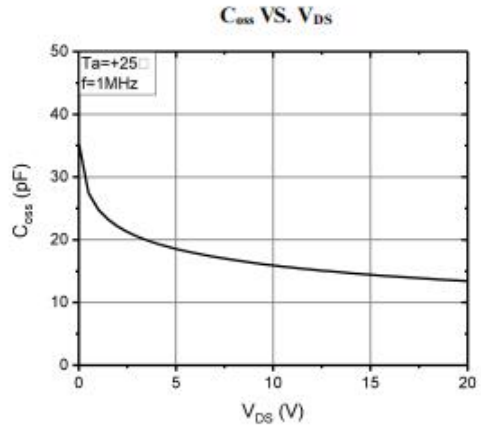

Test conditions unless otherwise noted: 25 °C

HTL7G06S006P 175 MHz Reference Design, 7.4V@500mA

175MHz @V_{DD} = 7.4V, I_{DQ} = 500mA

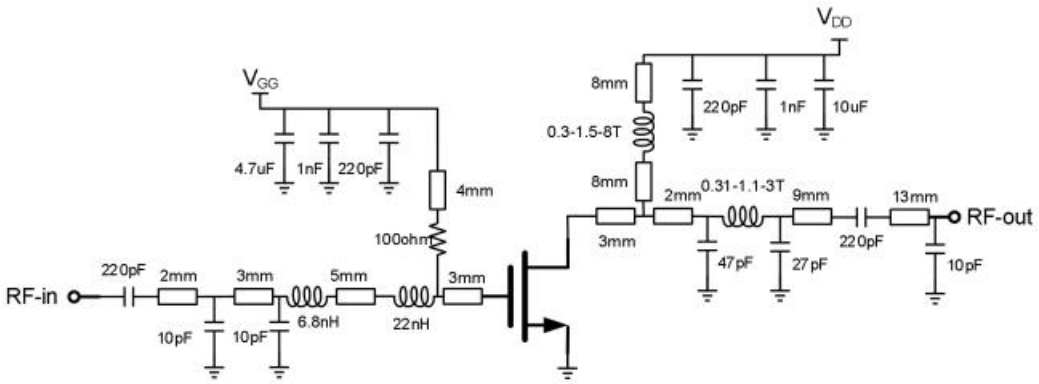

EVB Layout

HTL7G06S006P 520 MHz Reference Design, 7.4V@500mA

520MHz @V_{DD} = 7.4V, I_{DQ} = 500mA

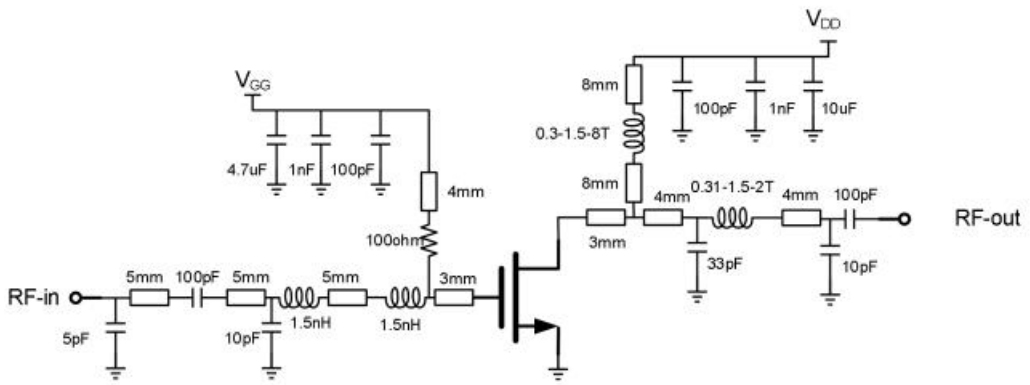

EVB Layout

Performance Plots 175 MHz & 520MHz Reference Design, 7.4V@500mA

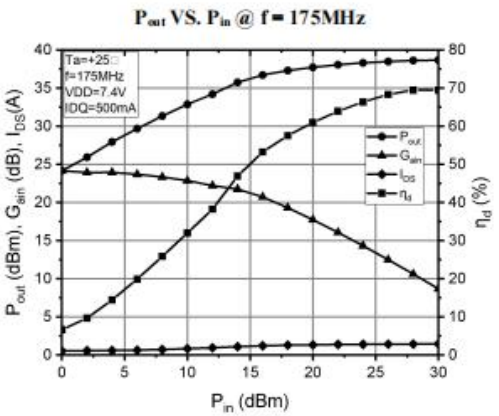

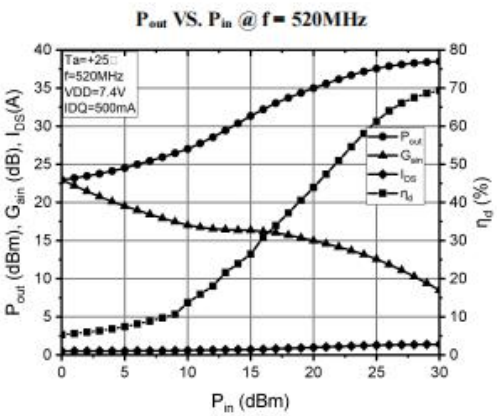

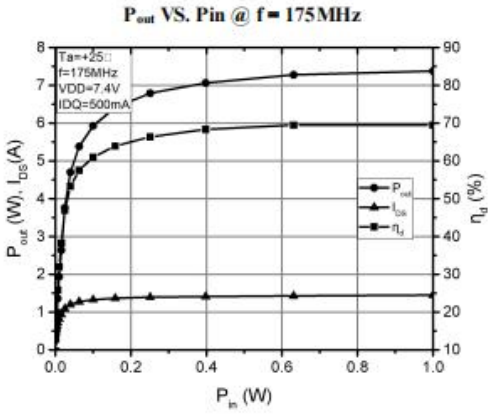

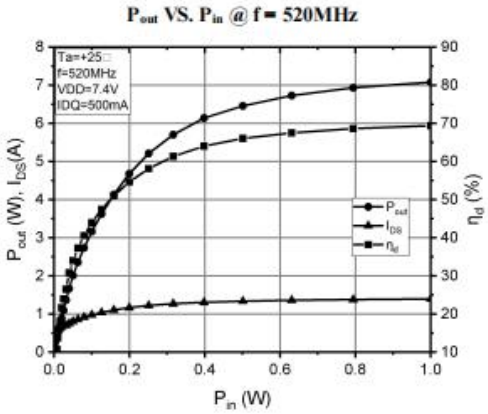

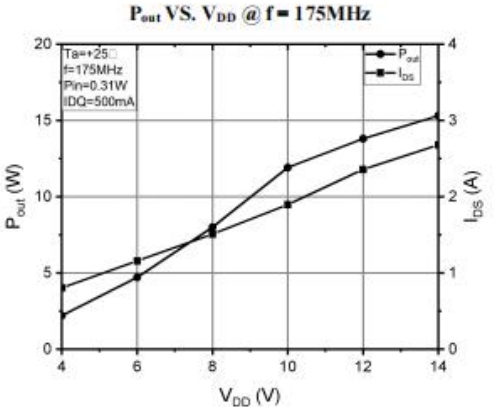

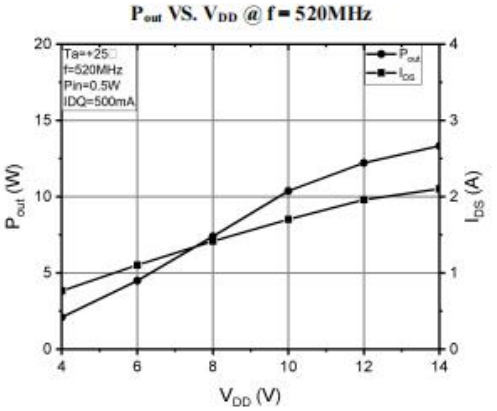

Test conditions unless otherwise noted: 25 °C, VDD = +7.4Vdc, IDQ=500mA, CW test on WATECH Application Board

Input/Output Impedance Characteristics @7.4V, 175-520 MHz

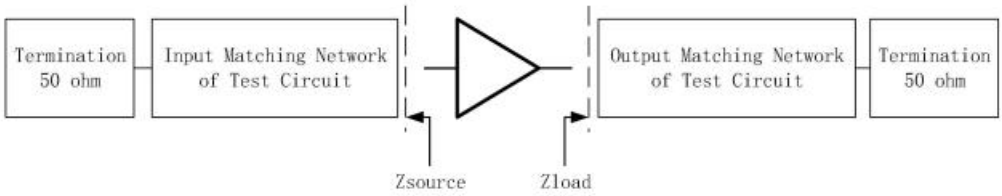

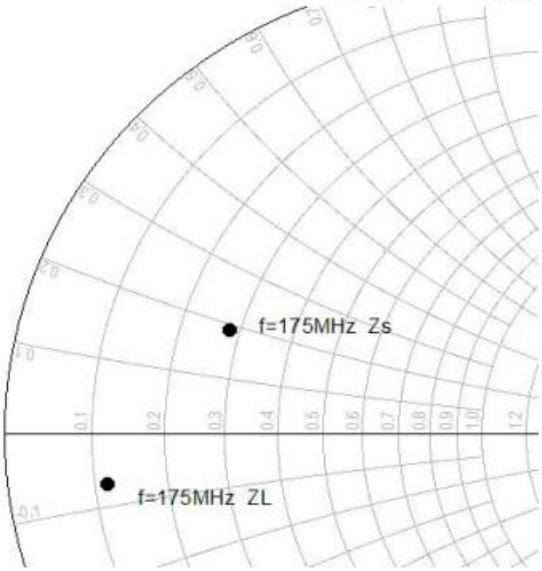

@P_{in}=0.31W, V_{DS}=7.4V, I_{dq}=500mA	
Z_s	13.90 + j 9.38
Z_L	5.21 – j 3.41

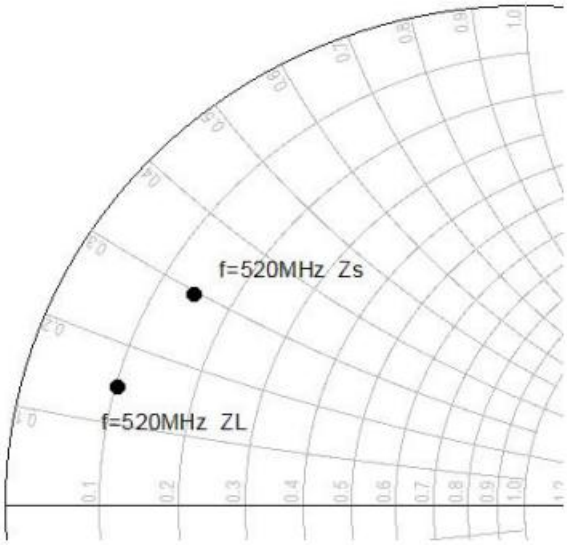

@P_{in}=0.5W, V_{DS}=7.4V, I_{dq}=500mA	
Z_s	7.02 + j 15.30
Z_L	4.92 + j 7.42

Test conditions unless otherwise noted: 25 °C, VDD = +7.4Vdc, IDQ=500mA, CW test on WATECH Application Board

HTL7G06S006P S-Parameters , 7.4.0V@500mA

Freq	S11		S21		S12		S22	
(MHz)	(mag)	(ang)	(mag)	(ang)	(mag)	(ang)	(mag)	(ang)
150	0.99	176.0	7.56	3.5	0.02	-83.3	0.84	15.1
175	0.97	172.4	6.66	-11.2	0.02	-97.2	0.84	-10.1
200	0.96	167.8	5.62	-32.9	0.02	-117.5	0.84	-46.2
250	0.94	161.2	4.44	-68.0	0.02	-151.7	0.84	-106.0
300	0.93	155.3	3.66	-102.2	0.02	175.7	0.84	-165.2
350	0.92	149.6	3.11	-135.8	0.02	144.3	0.83	136.3
400	0.92	144.2	2.70	-169.0	0.02	112.3	0.83	78.0
450	0.92	138.9	2.39	157.8	0.01	80.5	0.83	19.7
500	0.91	133.7	2.16	124.6	0.02	50.4	0.83	-38.6
520	0.91	131.6	2.07	111.2	0.02	37.5	0.84	-62.2
550	0.91	128.6	1.95	91.2	0.02	18.2	0.83	-97.2
600	0.91	123.4	1.77	58.0	0.01	-12.6	0.83	-155.8
650	0.91	118.4	1.62	25.2	0.01	-43.5	0.82	146.2
700	0.90	113.4	1.49	-7.2	0.01	-73.9	0.82	88.8
750	0.90	108.5	1.39	-39.7	0.01	-102.5	0.82	31.7
800	0.90	103.6	1.30	-72.3	0.01	-134.1	0.82	-25.7
850	0.89	98.7	1.23	-105.1	0.01	-164.7	0.82	-83.8
900	0.89	93.9	1.16	-138.2	0.01	162.4	0.81	-142.6
950	0.89	89.1	1.09	-171.1	0.01	131.3	0.81	158.6
1000	0.88	84.5	1.02	156.6	0.01	107.3	0.80	100.7
1050	0.87	80.0	0.97	124.3	0.01	72.7	0.80	43.9
1100	0.87	75.7	0.92	92.5	0.01	42.5	0.79	-12.8
1150	0.87	71.5	0.89	60.4	0.01	12.7	0.80	-70.4
1200	0.87	67.0	0.86	27.8	0.01	-18.1	0.79	-128.5
1250	0.87	62.5	0.83	-4.9	0.01	-49.3	0.79	172.8
1300	0.87	57.9	0.80	-37.5	0.01	-79.2	0.78	114.6
1350	0.87	53.3	0.78	-70.0	0.01	-108.3	0.78	56.6
1400	0.87	48.8	0.75	-102.4	0.01	-140.5	0.79	-0.8
1450	0.86	44.3	0.74	-135.0	0.01	-172.2	0.79	-58.6
1500	0.86	39.8	0.72	-167.7	0.01	158.4	0.78	-117.6

S-Parameters

Package Marking and Dimensions

- Line1 (fixed): fixed code H0606E
- Line2 (unfixed):Date Code + SS(sub lot Number)

This Marking SPEC only stipulates the content of Marking. For marking requirements such as font and size, please refer to the latest version of "Watech Product Printing Specification"

Marking

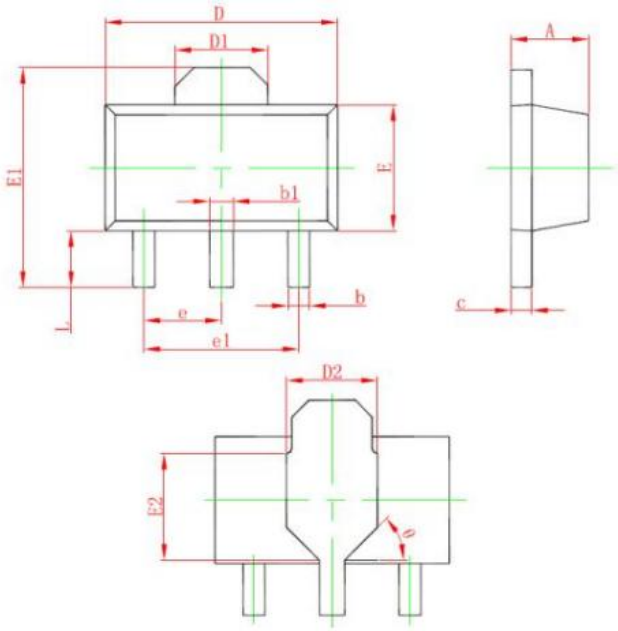

Symbol	Dimesions in Milimeters		Dimesions in Inches	
	Min.	Max.	Min.	Max.
A	1.400	1.600	0.055	0.063
b	0.320	0.520	0.013	0.020
b1	0.400	0.580	0.016	0.023
c	0.350	0.440	0.014	0.017
D	4.400	4.600	0.173	0.181
D1	1.550 REF.		0.061 REF.	
D2	1.750 REF.		0.069 REF.	
E	2.300	2.600	0.091	0.102
E1	3.940	4.250	0.155	0.167
E2	1.900 REF.		0.075 REF.	
e	1.500 TYP.		0.060 TYP.	
e1	3.000 TYP.		0.118 TYP.	
L	0.900	1.200	0.035	0.047
θ	45°		45°	

Package Dimensions

Tape and Reel Information

Package Type	Reel Size(inch)	Qty/Reel(pcs)	Qty/Box(pcs)	Qty/Carton(pcs)
SOT89	7inches	1000	10000	40000

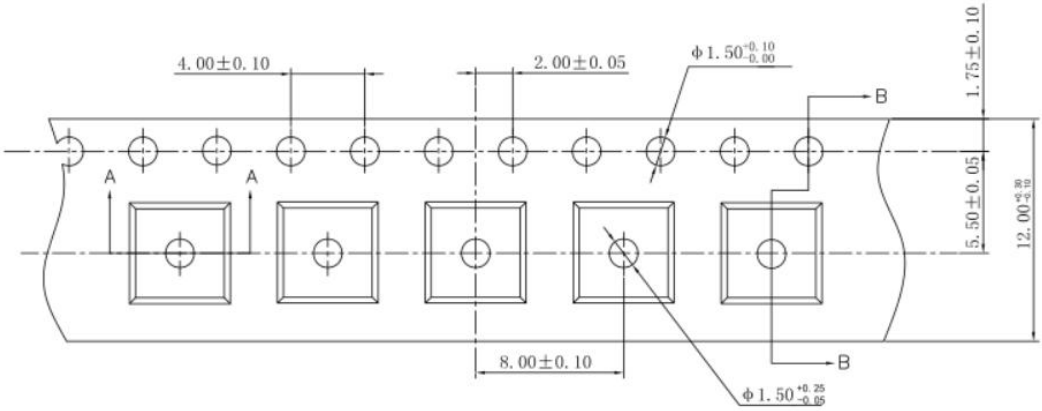

Tape & Reel Packaging Descriptions

Handling Precautions

Parameter	Rating	Standard
ESD – Human Body Model (HBM)	Class 1B	JESD22-A114
ESD – Human Body Model (MM)	Class A	EIA/JESD22-A115
ESD – Charged Device Model (CDM)	Class III	JESD22-C101

RoHS Compliance

This product is compliant with the 2011/65/EU RoHS directive (Restrictions on the Use of Certain Hazardous Substances in Electrical and Electronic Equipment), as amended by Directive 2015/863/EU.

Datasheet Status

Document status	Product status	Definition
Objective Datasheet	Design simulation	Product objective specification
Preliminary Datasheet	Customer sample	Engineering samples and first test results
Product Datasheet	Mass production	Final product specification

Abbreviations

Acronym	Definition
LDMOS	Laterally-Diffused Metal-Oxide Semiconductor
CW	Continuous Waveform

Revision history

Document ID	Datasheet Status	Release Date	Revision Version
Rev 3.2	Product	March 2023	New format based on English version datasheet
Rev 3.3	Product	March 2024	Version released after re review

Contact Information

For the latest specifications, additional product information, worldwide sales and distribution locations and information about WATECH:

- Web: www.watechelectronics.com
- Email: MKT@huatai-elec.com

For technical questions and application information:

- Email: MKT@huatai-elec.com

Important Notice

Information in this document is believed to be accurate and reliable. However, WATECH does not give any representations or warranties, expressed or implied, as to the accuracy or completeness of such information and shall have no liability for the consequences of use of such information.

“Typical” parameters are the average values expected by WATECH in large quantities and are provided for information purposes only. All information and specifications contained herein are subject to change without notice and customers should obtain and verify the latest relevant information before placing orders for WATECH products.

The information contained herein or any use of such information does not grant, explicitly or implicitly, to any party any patent rights, licenses, or any other intellectual property rights, whether with regard to such information itself or anything described by such information.

Applications that are described herein for any of these products are for illustrative purposes only. WATECH makes no representation or warranty that such applications will be suitable for the specified use without further testing or modification. Customers are responsible for the design and operation of their applications and products using WATECH products, and WATECH accepts no liability for any assistance with applications or customer product design. It is customer's sole responsibility to determine whether the WATECH product is suitable and fit for the customer’s applications and products planned, as well as for the planned application and use of customer’s third-party customer(s). Customers should provide appropriate design and operating safeguards to minimize the risks associated with their applications and products.

WATECH products are not designed, authorized or warranted to be suitable for use in life support, life-critical or safety- critical systems or equipment, nor in applications where failure or malfunction of a WATECH product can reasonably be expected to result in personal injury, death or severe property or environmental damage.This document as well as the item(s) described herein may be subject to export control regulations. Export might require a prior authorization from competent authorities.